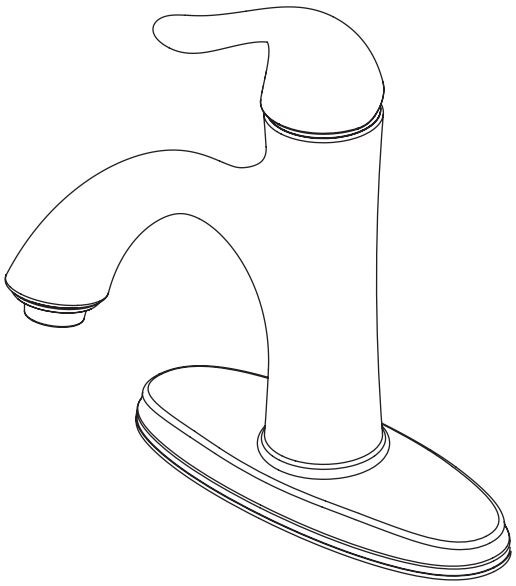

BATHROOM FAUCET

H01L-212-CH – Polished chrome finish with pop-up
H01L-212-BN – Brushed nickel finish with pop-up
H01L-212-ORB – Oil rubbed bronze finish with pop-up

PACKAGE AND HARDWARE CONTENTS

PART	DESCRIPTION	QUANTITY
A	Faucet assembly	1
B	Optional deck plate	1
C	Push pop-up assembly	1
D	Plastic washer	1
E	Metal washer	1
F	Mounting nut	1
G	Screw	2

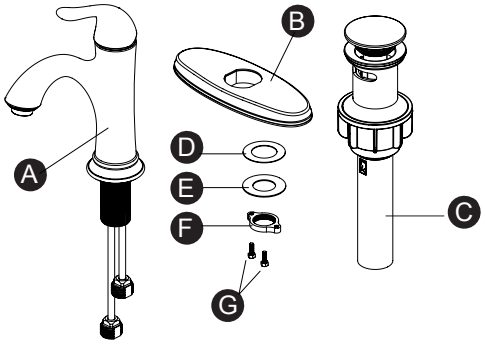

SAFETY INFORMATION

Please read and understand this entire manual before attempting to assemble, operate or install the product.

WARNING

- Protect your eyes with safety glasses when cutting or soldering water supply lines.

CAUTION

- If you solder the joints during installation, the seats, cartridges, and washers must be removed before using a flame or the warranty will be voided on these parts.
- Cover the drain to avoid losing parts.

PREPARATION

Before beginning assembly of product, make sure all parts are present. Compare parts with package contents list and hardware contents.

Estimated Assembly Time: 30 minutes

Tools Required for Assembly (not included): Adjustable Wrench, thread sealant tape, Silicone

Installations may vary depending on how the previous faucet was installed. Supplies necessary for the installation of the faucet are not all included; however, they are available wherever plumbing supplies are sold.

Prior to beginning installation, turn off the hot and cold water lines, then turn on the old faucet to release built-up pressure. When installing the new faucet, hand tighten the connector nuts. **DO NOT OVERTIGHTEN.** Connections that are too tight will reduce the integrity of the system.

PRODUCT SPECIFICATIONS

SPECIFICATIONS
Max. Flow Rate: 1.2 GPM (4.54 LPM) at 60 PSI
ASME A112.18.1/CSA B125
NSF 61-9
Polished chrome, brushed nickel or oil rubbed bronze finish

SPECIFICATIONS
Ceramic cartridges
Manufactured to include no more than 0.25% weighted average lead content on wetted surfaces

ASSEMBLY INSTRUCTIONS

1. Turn off water at the supply valve under the sink or at the main water supply, disconnect the supply line, and remove old faucet.

   Clean and dry surface area where new faucet will be mounted.

1

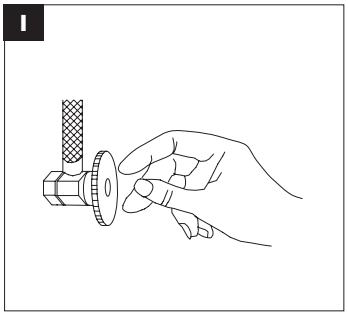

2. **Optional Flange Installation:**

   Before installation, ensure that the flange (1) is placed on the bottom of the new faucet assembly (2). Place the faucet assembly (2) through the mounting hole in the sink. Secure the faucet assembly (2) with the plastic washer (3), metal washer (4) and nut (5). Hand tighten the nut (5) onto the faucet assembly (2) shank. Lock the nut (5) into position by tightening the screws (6) with a Phillips screwdriver.

2

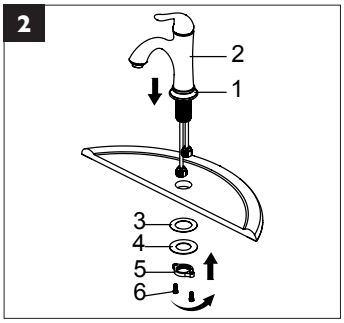

3. **Optional Deck Plate Installation:**

   Before installation, remove the flange. Align the hole in the gasket (1) and deck plate (2) with the mounting hole in the sink. Place the faucet assembly (3) through the deck plate (2) and mounting hole in the sink. Secure the faucet assembly (3) with the plastic washer (4), metal washer (5) and nut (6). Hand tighten the nut (6) onto the faucet assembly (3) shank. Lock the nut (6) into position by tightening the screws (7) with a Phillips screwdriver.

   NOTE: If the sink is uneven, use silicone under the gasket (1).

3

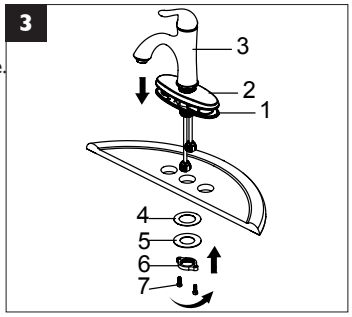

4. **Connecting Water Lines:**

   Use 1/2 in. I.P.S. faucet connections (2) (not included), or use supply line coupling nuts (3) (not included) with a 3/8 in. O.D. ball-nose riser (1). Before tightening the faucet connector to the water supply, apply a second wrench to the supply tube fitting. This will prevent the supply tube from moving or twisting when tightening the faucet connector. Do not overtighten.

   NOTE: The hot side inlet tube is indicated by a label.

4

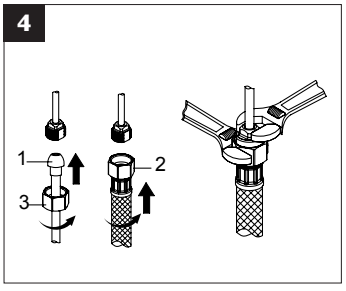

5. Remove the bottom gasket (1) and nut (2) from the top gasket (3) and pop-up body (4).

5

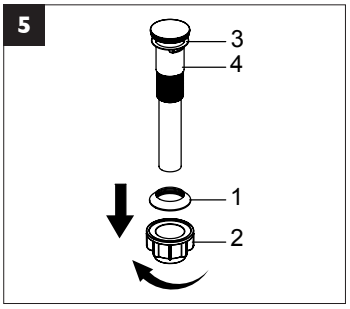

6. Insert the pop-up body (1) into the sink. Ensure that the top gasket (2) rests securely between the top of the sink and the top of the pop-up body (1).

6

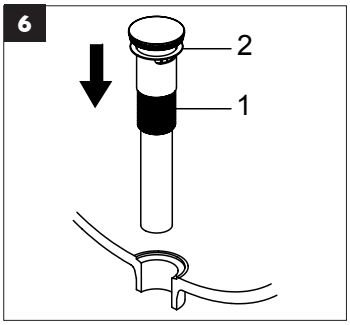

7. From underneath the sink, screw the bottom gasket (1) and nut (2) onto the pop-up body (3) by twisting clockwise until secure.

7

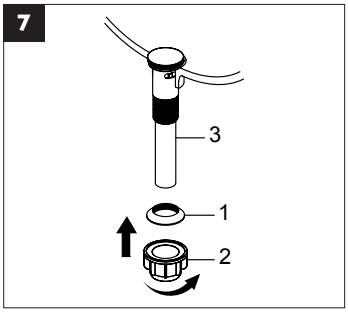

8. **IMPORTANT:** After installation is complete, remove the aerator from the faucet with a coin (1) to flush the water lines. Turn on the water supply and allow both hot and cold water to run for at least one minute each. This flushes away any debris that could cause damage to internal parts. While the water is running, check for leaks. Turn off the water and replace the aerator.

8

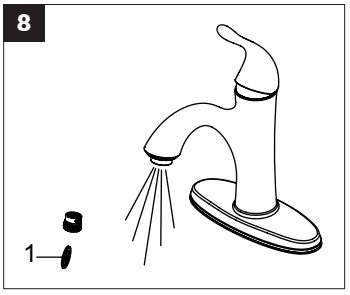

TROUBLESHOOTING

PROBLEM	POSSIBLE CAUSE	CORRECTIVE ACTION
Leaks underneath handle.	Bonnet has come loose or O-ring on cartridge is dirty or twisted.	1. Move the handle to the OFF position. Unscrew the handle screw and remove the handle. 2. Tighten the bonnet by turning it clockwise. Move the cartridge stem to the on position. The leak should stop draining out from around the cartridge stem. 3. Shut off the water supply. Remove the bonnet by turning it counterclockwise. Lift out the cartridge valve. Inspect the larger O-ring on the cartridge bonnet and the smaller O-ring on the cartridge stem. Remove any debris from the O-rings. If either O-ring is twisted, straighten it out. 4. Position the cartridge back into the faucet body. Make sure the ridges on the two sides of the cartridge bonnet fit into the grooves on the two sides of the faucet body. Tightly screw the bonnet onto the faucet body. 5. Re-install the handle.
Water does not completely shut off.	Rubber valve seat is dirty, stuck, or broken.	1. Shut off the water supply to the faucet that leaks. 2. Remove the handle on the problem side. Loosen the bonnet by turning it counterclockwise. Lift out the cartridge assembly. 3. Inspect the rubber valve seat in the faucet body. If there is debris or brass scrap on the surface of the seat, remove it. If the rubber seat is stuck tightly in the water inlet hole, push it gently with a fingertip so that it moves up and down smoothly. The spring (smaller end up) must be replaced underneath the valve seat. 4. Replace the cartridge in the faucet body. Make sure that the ridges on the two sides of the cartridge bonnet fit into the grooves on the two sides of the faucet body. Tightly screw the bonnet onto the faucet body. 5. Re-install the handle.
Faucet leaks around aerator.	Aerator incorrectly fitted.	1. Unscrew the aerator by turning it clockwise. Inspect the black rubber packing inside the aerator. The rubber packing should be flat. 2. Screw the aerator onto the spout end and tighten.
Improper water pattern.	Aerator dirty or small parts inside aerator improperly installed.	1. Remove the aerator from the spout end by turning it clockwise. 2. Gently flush the small parts inside the aerator to clear away any debris. 3. Re-install the small parts as shown in the exploded diagram. Metal screens must be flat and plastic supporter must be straight. 4. Screw the aerator onto the spout end and tighten.

CARE AND MAINTENANCE

Clean periodically with a soft cloth. Avoid abrasive cleaners, steel wool, and harsh chemicals

ROUGH-IN

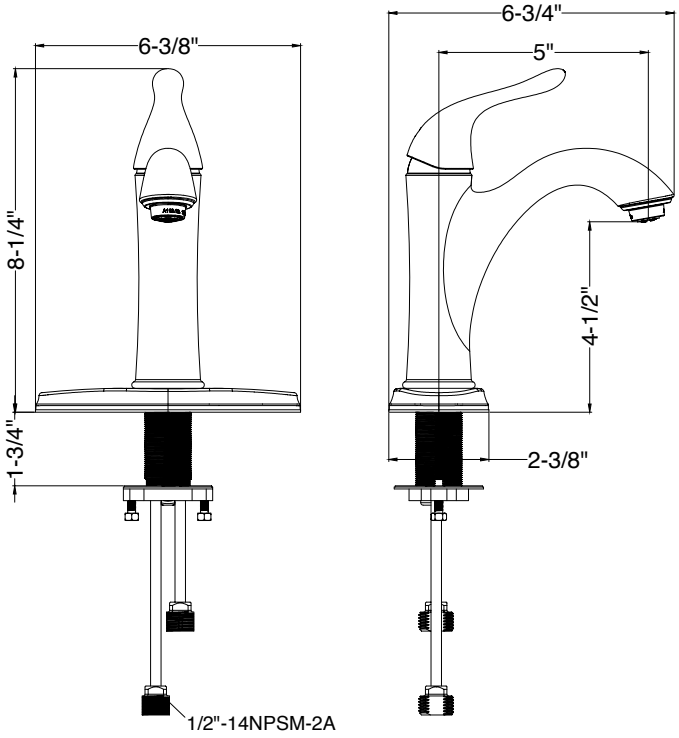

PRODUCT SPECIFICATIONS

PART	DESCRIPTION	PART #	PART #	PART #
		H01L-212-CH	H01L-212-BN	H01L-212-ORB
1	Handle	RP13625CH	RP13625BN	RP13625ORB
2	Screw	RP50002	RP50002	RP50002
3	Cap	RP80344CH	RP80344BN	RP80344ORB
4	Bonnet	RP70224	RP70224	RP70224
5	Cartridge assembly	RP20052	RP20052	RP20052
6	Aerator assembly	RP30187	RP30187	RP30187
7	Washer	RP64131	RP64131	RP64131
8	Washer	RP64188	RP64188	RP64188
9	Nut and screw	RP56115	RP56115	RP56115
10	Flange and washer	RP80345CH	RP80345BN	RP80345ORB
11	Deck plate	RP80346CH	RP80346BN	RP80346ORB
12	Base plate	RP80347	RP80347	RP80347
13	Pop-up assembly	RP40269CH	RP40269BN	RP40269ORB

